CHAPTER 22

VEHICLE RECOVERY

This chapter describes a few of the more common field vehicle recovery procedures – operations you can perform with limited resources. In any of these operations, remember to use brainpower to make up for a lack of available horsepower. Take your time in figuring your rigging and include a reasonable factor for safety. Sloppy planning results in wasted time and may further damage your vehicle and equipment as well as injure yourself and others. Recovery failures are often the direct result of haste.

(For Army Only : Refer to FM 20-22 for further information.)

RECOVERY PROCEDURE

Remember the steps in Figure 22-1 to improve chances of vehicle recovery:

Reconnoiter the area.
Estimate the situation.
Calculate the ratio.
Obtain the resistance.
Verify the solution.
Erect the rigging.
Recheck the rigging.
You are ready.

FIGURE 22-1. Vehicle Recovery.

TOWING VEHICLES

Before towing any vehicle, refer to the vehicle technical manual/order. The following are general rules for towing

- Move towed loads at slow speed. Avoid quick stops.
- Mark towing vehicles with warning lights or flags.
- Use a wrecker whenever possible. It is designed for towing.
- Use a tow bar in preference to chains, ropes or cables. Tow bars keep the towed vehicle from running into the towing vehicle.
- Connect cables, chains, or ropes, if used, to the pintle of the towing vehicle and to the lifting shackles of the towed vehicle.
- In cities or heavy traffic, tie the front lifting shackles of the towed vehicle tightly to the rear lifting shackles of the towing vehicle and connect the air brakes.
- Proceed slowly at 5 to 10 MPH because the towed vehicle will skid on turns at higher speeds.
- When using a tow bar, connect a chain between the two vehicles for safety in case the bar breaks or becomes disconnected.
- Be sure a driver is in every motor vehicle being towed to control it, unless a wrecker is towing the vehicle.

CAUTION

Always use rigger's gloves when handling chains, cables, and wire rope.

ANCHORING VEHICLES

Trees, stumps, or rocks are natural anchors. Always attach your lines near the ground when using a tree or a stump as an anchor. You should lash the first tree or stump to a second one to provide added support for the line. When using a rock as an anchor, be sure it is large and firmly embedded in the ground.

Construct anchors when natural ones are not available. The deadman is one of the best types of constructed anchors and can be used for heavy loads (Figure 22-2). It consists of a log timber, steel beam, or other similar object buried in the ground with a deadline connected to it at the center. To construct a deadman, follow these steps:

- Select a place where the direction of pull is as nearly horizontal as possible, such as a sharp bank or crest. Thus, you obtain more holding power with less digging.
- When digging slant the bank at least 15 degrees from the vertical and undercut toward the disabled vehicle.
- Drive stakes in front of the deadman at each end to hold it in place.
- Tie the deadline to the center of the deadman so the main or standing part of the line leads from the bottom of the deadman. Dig a narrow trench for the deadline; bear to the center of the deadman. If the deadline has a tendency to cut into the ground, place a log or plank under the line at the outlet from the inclined trench.
- Tie the deadline to the center of the deadman so the main part of the line leads to the bottom. This will keep the deadman from rotating out of the hold.

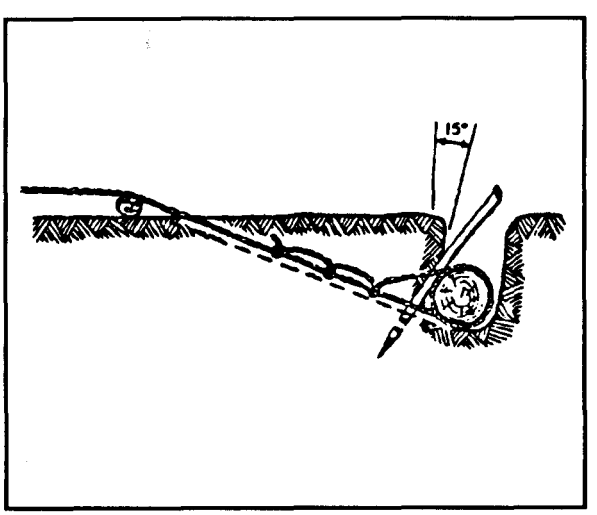

FIGURE 22-2. Log Deadman (Anchor).

WINCH RECOVERY

Many military trucks are equipped with winches. how how to get the most from a winch without danger to personnel or abuse to the equipment.

For Army Only: Your vehicle technical manual completely describes the winch on your vehicle and details of its operation, care, and maintenance. FM 20-22 explains general characteristics, effective capacities, and details for use.

To ensure your safety, the protection of your equipment, and the success of your recovery operation, use the following as a guide:

- Check the capacity of your winch. The capacity shown on the manufacturer's plate is the maximum with one layer of cable on the drum. Each successive layer increases the diameter of the drum and reduces the winch capacity to as little as 50 percent of the rated capacity when the last layer is being wound on the drum.
- Check the cable for rust, kirks, or frays.
- Estimate the total resistance. Consider grade or slope, weight of the vehicle, and type of terrain. Then add a reasonable factor for safety.
- Check your equipment. Be sure you rig safely to overcome the resistance with the equipment available.
- Select or provide a suitable anchor. Remember, the purpose of this operation is to recover a vehicle, not to pull stumps.
- Rig and check rigging. Do not put power on your winch until you check every element in your rigging and are satisfied that you made no mistakes.
- Clear personnel from the danger area. All persons observing the operation should stand outside the angle formed by the cable under stress at a distance at least equal to the distance between the two most distant points in the rigging. Clear personnel away before tightening the cable.

Single-Vehicle Winch Operation

If you have been individually dispatched and get into a spot where your traction is not enough to get you through, use your winch and suitable rigging to pull you through or get you back to solid footing. Working alone or with your crew, recovery may take time, but do not skimp on planning. Your training should keep you out of the really bad spots, and if you remain calm, you should get through by applying a little extra effort.

Vehicle With Winch. Select or construct a strong anchor. Attach a snatch block to the anchor with your tow chain. Run the winch cable through the block and back to the truck (Figure 22-3). Take up the slack gradually and pull the truck forward with its winch. Power may be applied to the wheels at the same time. Your vehicle technical manual/order technical order gives details on the operation.

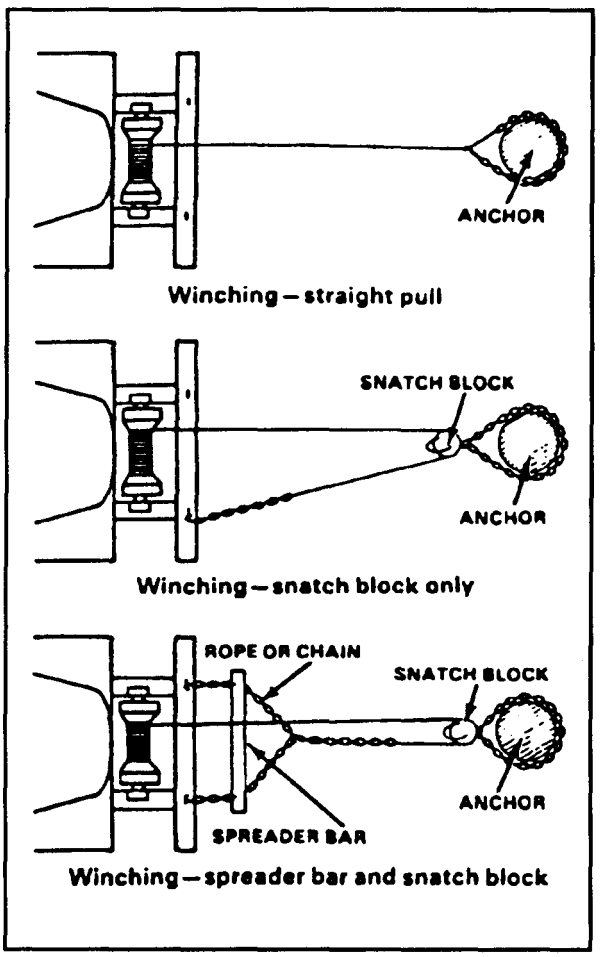

FIGURE 22-3. Vehicle Winching.

Vehicle Without Winch (Dual Wheels). Dual wheels and ropes may be used to winch out vehicles not equipped with winches (Figure 22-4). Fasten one end of each rope to a rear wheel hub and the other to an anchor. Place the rope between the duals and through one of the holes in the wheel disk. Tie the rope around the hub where it will be clear of the valve stem. Move the vehicle in reverse gear to wind the rope.

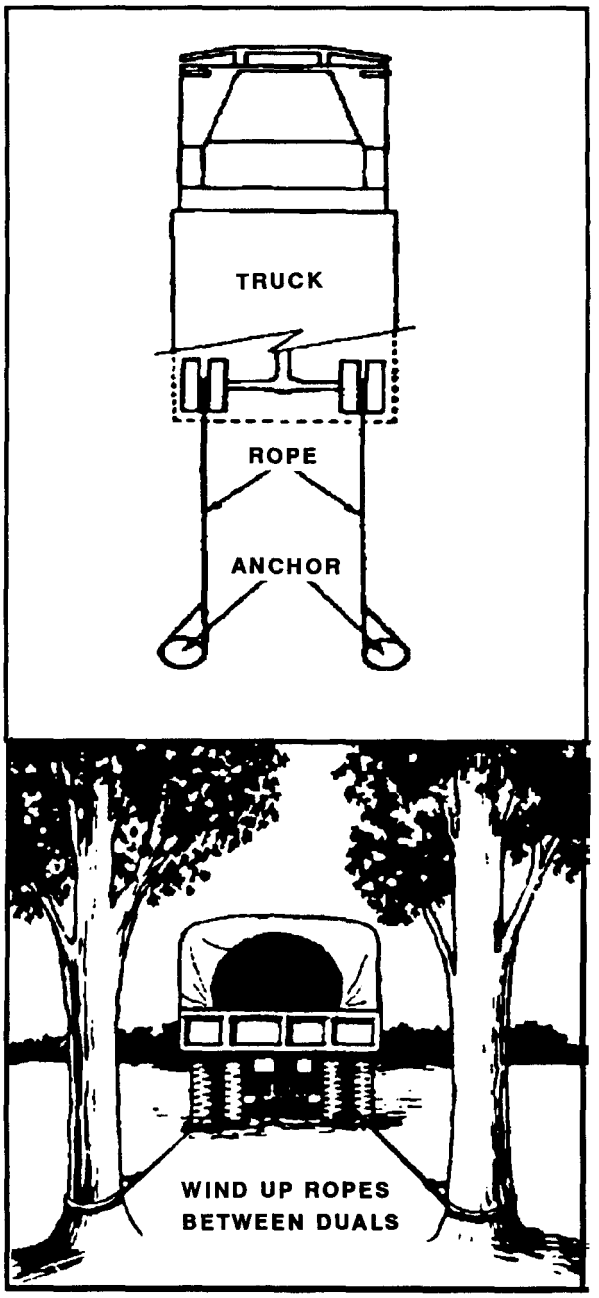

FIGURE 22-4. Dual Wheels and Rope Used as a Winch.

Vehicle Without Winch (Single Wheels). Place a bar through the hole in the end of the axle flange of each rear wheel. On each wheel, fasten one end of the rope to the bar and the other to an anchor. Move the vehicle in reverse gear to wind the rope in behind the bar (File 22-5). This procedure cannot be used on vehicles equipped with a Center Tire Inflation System (CTIS).

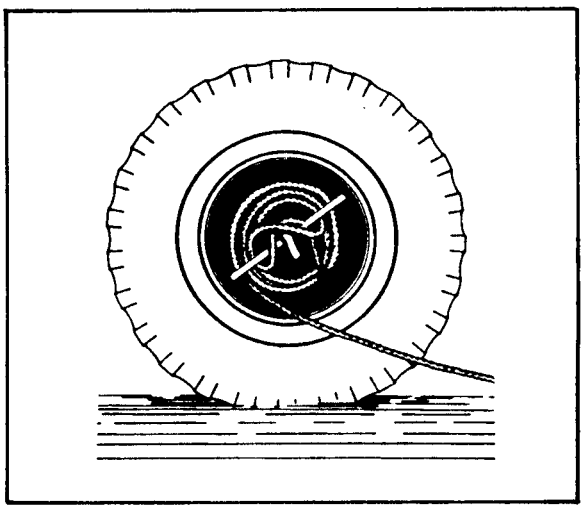

FIGURE 22-5. Single-Wheel Winch.

Two-Vehicle Winch Operation

Mechanical advantage is gained by using a mechanism to transmit force. A small force, when moved through a long distance by one or more mechanisms (pulleys), will move a large weight (vehicle) for a short distance. Use one of the following procedures when rigging for greater mechanical advantage.

Two-Part Line. This simple hookup gives a 2:1 mechanical advantage (Figure 22-6). Attach a snatch block to the load. Next, run your winch cable through the block and secure the cable to the winch vehicle. Place a log in front of the towing vehicle to help hold its ground.

Three-Part Line. To get a mechanical advantage of 31, use two snatch blocks – one at the load and one on the winch vehicle (Figure 22-7). Thread the winch cable first through the block on the load, back through the block on the winch, and then again to the load where it is secured.

Four-Part Line. To get a 4:1 mechanical advantage, use two snatch blocks – a double-sheave block for the load and a single-sheave block for the winch vehicle (Figure 22-8). Thread the winch cable through one sheave of the double block attached to the load back through the single sheave on the winch vehicle, and again to the load through the second sheave of the double block. Finally secure it to the winch vehicle.

Winch Safety

Cable. Recovery operations take time. Do not hurry. A broken winch line reacts like a whip. When hooking to a vehicle, use both shackles whenever possible so effort is applied equally and damage to the vehicle is minimized.

Never bend the wire cable at a sharp angle. Straighten out all kinks and twists as you take up the slack. Do not let tractors or vehicles with metal tracks run over the cable. Such abuse flattens the cable, exposes the Manila hemp core, and lets water enter, causing internal rust and weakening the cable.

WARNING

Stand clear of a winch cable before it is tightened. A cable being tightened may break and whip back with enough force to seriously maim or kill.

After using the winch, have one person or preferably two pull back on the cable while it is wound slowly and evenly on the drum in accordance with the appropriate vehicle operator -10 TM. Keep the cable lubricated according to the vehicle lubrication order.

Shear Pin. When the winch is overloaded, the shear pin breaks to protect the cable. Never use makeshift shearing of unknown strength to replace a broken pin. Too strong a pin may snap the cable and damage the winch. Use only authorized replacement pins. Do not depend on the shear pin for protection. Even with the proper pin installed, a kinked, damaged, or weakened cable may snap. Vehicles with electric winches have circuit breakers to protect the winch from overloading. Check the appropriate vehicle operator -10 TM for correct winch.

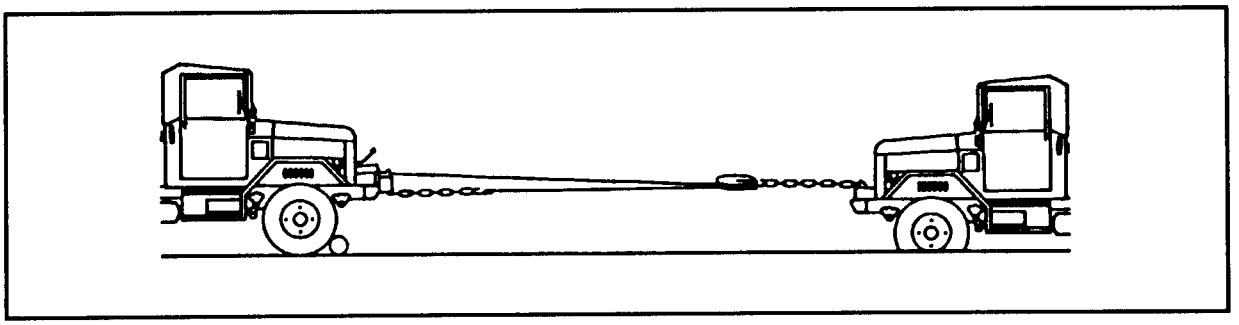

FIGURE 22-6. Two-Part Line.

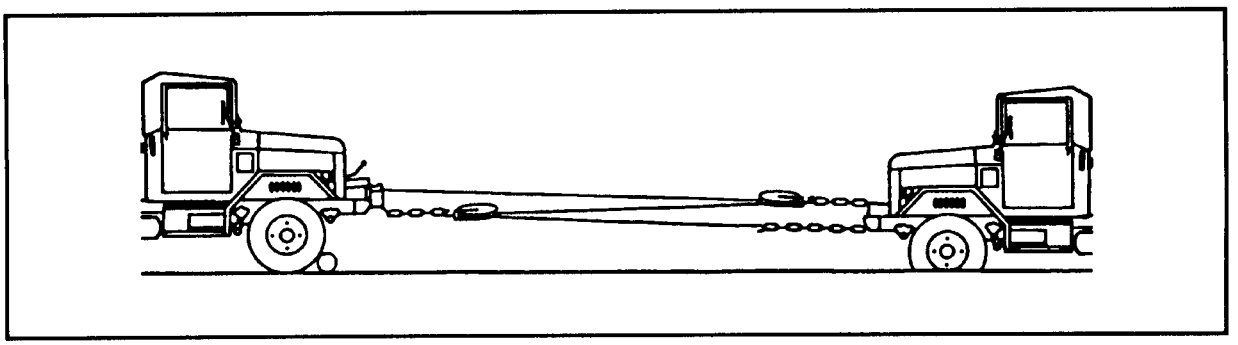

FIGURE 22-7. Three-Part Line.

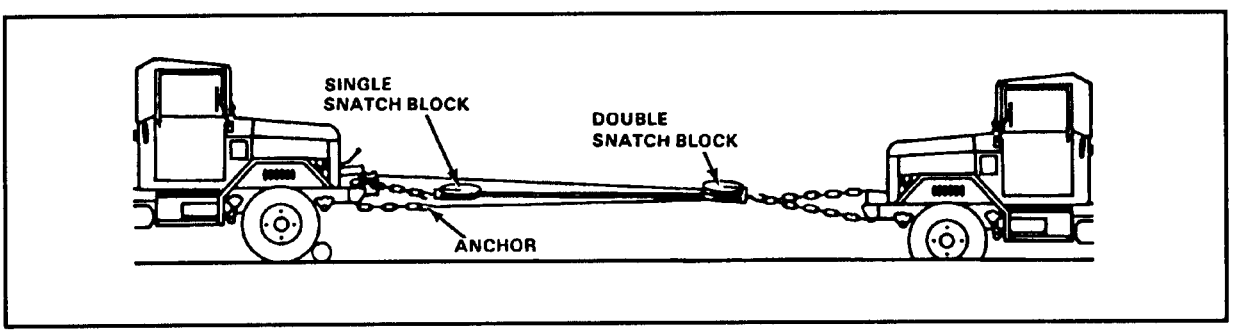

FIGURE 22-8. Four-Part Line.

MAN POWER RECOVERY

Recovery operations with limited man power and material at hand can be successful if you have enough time.

If your vehicle has dropped into a hole or ditch, man power can get it out. First, find an 8-foot length of timber or similar material with a diameter that available personnel can handle. Place a suitable fulcrum near the point of lift — a log or rock that will not move when pressure is applied. Rig the lever under the bumper for the first lift. Block when you have gained all you can. Rerig for a second lift with the point of the lever under the axle if possible. Lift and block. Repeat these steps until the vehicle can be backed off without too much trouble.

If you are alone and must move a light vehicle a short distance without power, use a lever. You will need a fairly long pole or crowbar, a rope, cable, or chain, and a suitable anchorage for the point of the bar. The distance from the lever to the point of attachment of the tow rope must be quite short to give you enough advantage. You will not move very far at each try, but you will be able to move slowly.

A-FRAME RECOVERY

Narrow ditches, slit trenches, and shell holes can quickly stop your truck. They are common obstacles to off-road movement and maybe hard to see. If your front wheels should drop into one, the A-frame is a very useful recovery tool (Figures 22-9 and 22- 10). It is not very difficult to put together nor too complicated to use. You need two 8-foot poles with a large enough diameter to support the front end of your truck. Lash them together near the top with a figure eight or girth knot; use your tow chain or a length of rope. Dig two 10- to 12-inch holes 5 or 6 feet apart to hold the legs in position when power is applied. Rest the upper end of the A-frame on the hood of the truck with the legs in the anchor holes. Select a suitable anchor in front of the truck. Tie a line from the A-frame joint to the anchor, bringing the frame up to a position where the frame joint is directly over or slightly to the rear of the bumper. Move your winch line through a snatch block fastened to the A-frame joint and secure it to the front bumper.

Winch up the front end of the truck until the wheels clear the ditch. Then slowly back the vehicle off to solid ground. When safely away from the edge of the ditch, lower the wheels and unhitch your rig. If you have no winch, another vehicle may be used for power, though more rigging will be required.

FIELD EXPEDIENTS

Field expedients are one-time emergency operations or procedures that you may use to get out of tight spots during tactical operations. Use expeclients only under unusual or emergency conditions. The equipment is usually prepared as needed from materials at hand, most of which are designed or intended to serve another purpose. For instance, tire chains used as tow chains area field expedient. A truck tarpaulin used to wrap a 1/4-ton truck to float it across a river is another example. The list of field expedients that have been successfully used is long. It is beyond the scope of this text to describe all of them. However, the few described below give you an idea of the possibilities.

Substitutes for a Jack

If an outside dual is flat, a practical substitute for a jack is to run the inside dual up on a small rock or log. This lifts the outside tire off the ground so you can change the tire.

Another simple method, good for any wheel on an all-wheel drive vehicle, is to rig an inclined plane with two logs of suitable size (or a stone and a log) (Figure 22-11). When the vehicle is driven ahead the axle is pushed up the log until the wheel clears the ground. Set brakes and block the vehicle securely. You can easily back off when your job is completed.

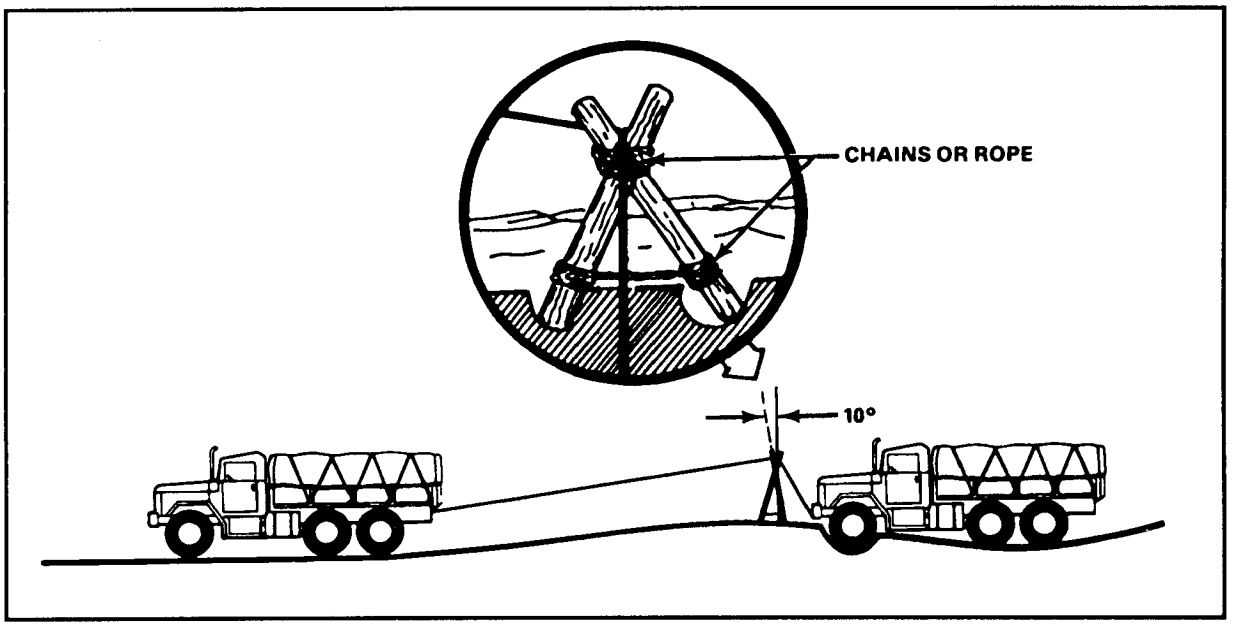

FIGURE 22-9. An A-Frame Supplying Lifting Force.

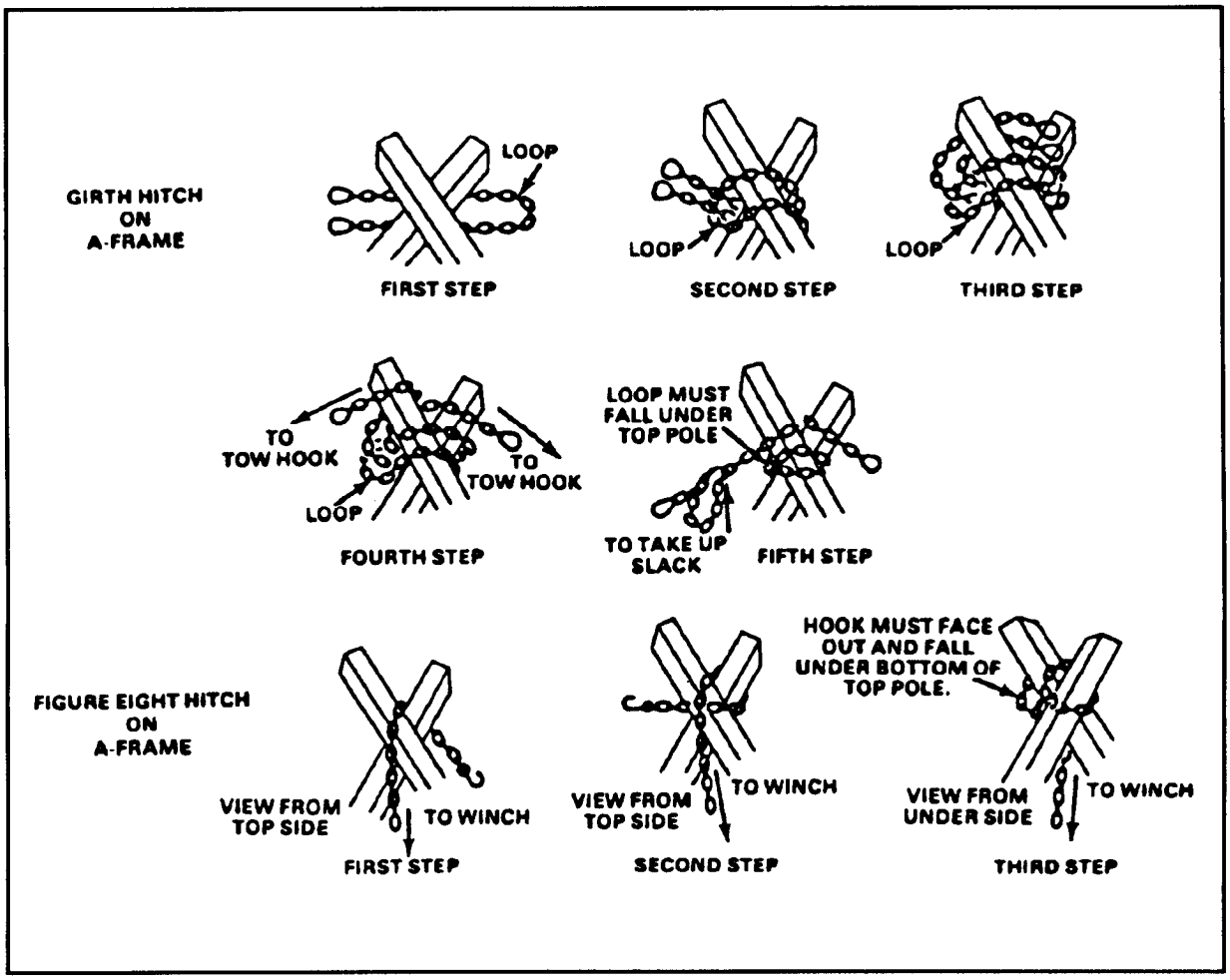

FIGURE 22-10. Lashing an A-Frame With a Girth Hitch and a Figure Eight Hitch.

To raise the front end, make your own bumper jack by fastening a 5-foot piece of timber at an angle to the front bumper with a chain or rope (Figure 22-12). Move your vehicle backward until the timber is vertical and the wheel clears the ground. Set brakes and block the vehicle securely before working on the tire. When through, pull forward and unhitch.

Method for Raising a Wheel

If one of your driving wheels falls in a deep hole, you can get out with a log and a chain (Figure 22-13). Chain the log to the wheel and move forward slowly to prevent spinning. If the wheel spins, the log will damage the fender or other parts of your vehicle. After clearing the hole, force the log under the wheel to keep it from falling back into the hole.

Use of a Skid

A flat tire or bad wheel that you cannot repair should not stop your four-wheel drive (4 x 4)

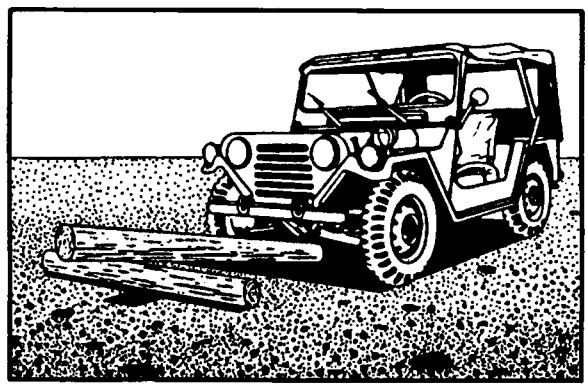

FIGURE 22-11. Substitute for a Jack (Logs).

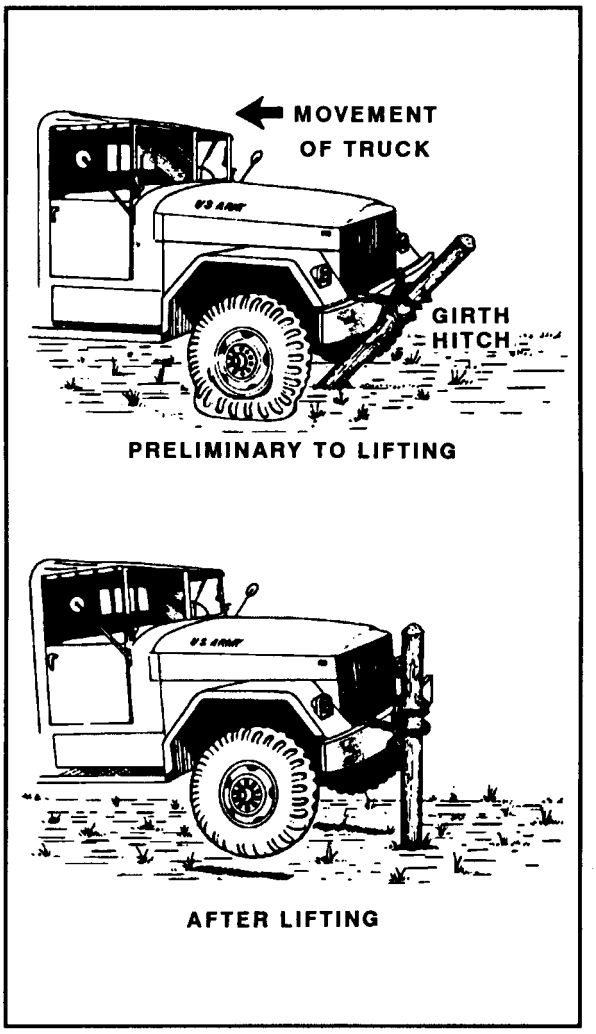

FIGURE 22-12. Substitute for a Jack (Bumper).

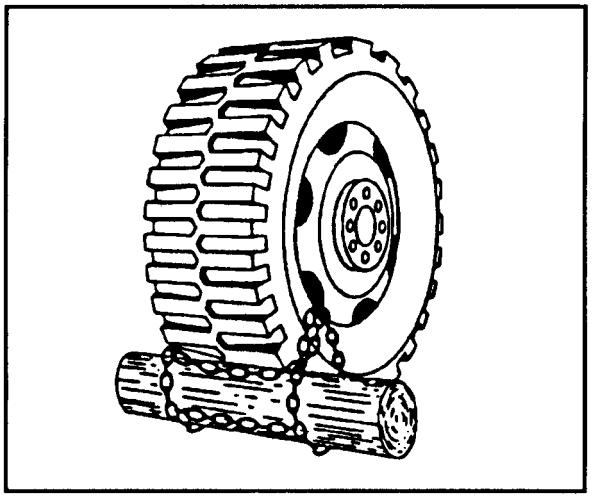

FIGURE 22-13. Raising a Wheel.

vehicle. Use a skid on the rear wheels only (Figure 22-14). If necessary, change wheels from one hub to another. Use a skid in the following manner:

- Obtain a pole 4 inches in diameter and 6 to 8 feet long.
- Place one end of the pole above the cross member near the transmission and the other end on the ground.
- Pass the pole under the spring U-bolts, align it with the spring and lash it securely to the spring.
- Move the vehicle, using front-wheel drive. Starting will be difficult, but once moving, the vehicle will ride and handle surprisingly well.

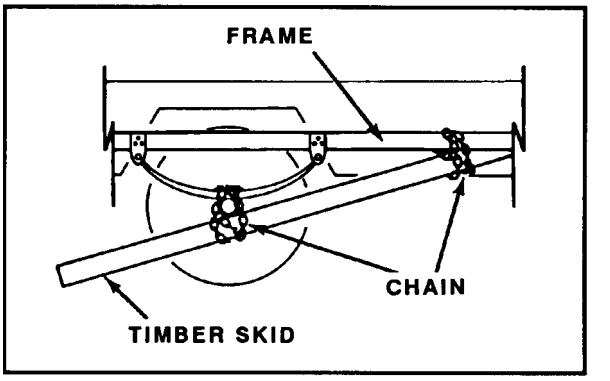

FIGURE 22-14. Skid Arrangement.

Substitutes for Tire Chain

Rope or tow chains can be wrapped around the wheels as tire chain substitutes. Fasten them securely, but leave slack around the tires to prevent damage. Remember, these are only temporary substitutes. Remove them as soon as possible.

Engine Failures During Field Driving

Fuel or ignition troubles commonly cause engine failures in the field. You can correct some of these by field expedients, but remember, these are only field expedients, not repairs. Inform your unit maintenance personnel as soon as possible so that proper repairs can be made, if necessary. A few of these field expedients are described below.

(For Army Only: More field expedients are explained in FM 20-22 and appropriate operator vehicle -10 TM.)

Shorted Distributor Cap. A cracked distributor cap will cause your engine to miss and backfire, particularly in damp weather when the crack is filled with moisture. To correct this, carefully clean and dry the distributor cap, scrape the crack or runner, and fill the crack with tar or other sticky material (Figure 22-15).

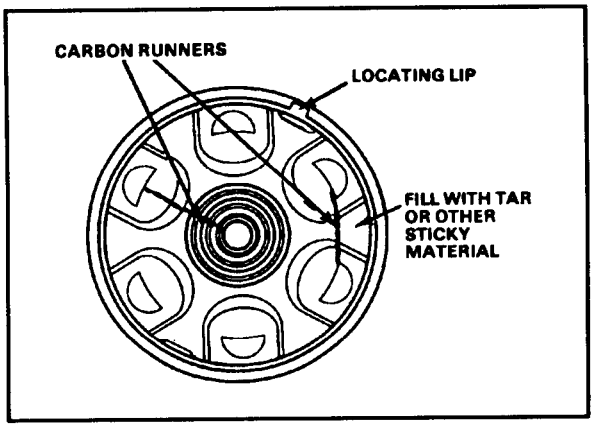

FIGURE 22-15. Shorted Distributor Cap Repair.

Broken Distributor Point Spring. If your engine cuts out, stops, and cannot be restarted, the cause may be a broken distributor point spring. Take off the distributor cap and if this is the cause, cut a piece of rubber from a tire and double it behind the spring (Figure 22- 16). The engine will then start and operate at slow speeds. The rubber substitute cannot close the point fast enough for high-speed operation.

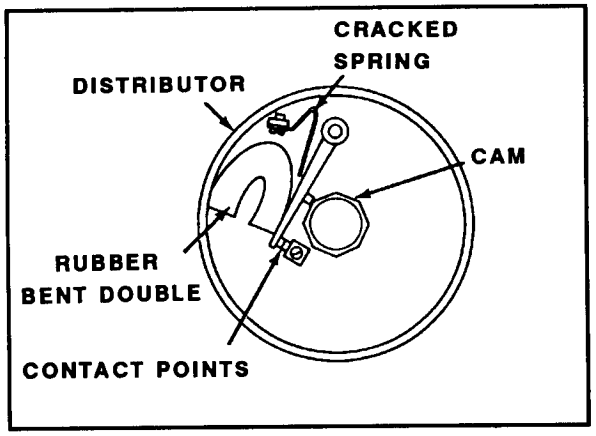

FIGURE 22-16. Broken Distributor Point Spring Repair.

Frozen Fuel Lines. Condensation in your fuel tank may get into the fuel lines and freeze in cold weather. This effectively cuts off the fuel supply to your carburetor. Thaw out these spots using hot water. Never use a flame or any device that could cause a spark directly on the line.

Leaking Line Fitting. Leaks at fuel line fittings can develop from the vibrations caused by cross-country operation and may result in an extremely dangerous condition if not discovered and corrected promptly. To correct this deficiency, unscrew the coupling nut, wind a piece of string clockwise behind the flare, slide the coupling nut over this temporary gasket, and tighten with a wrench (Figure 22-17).

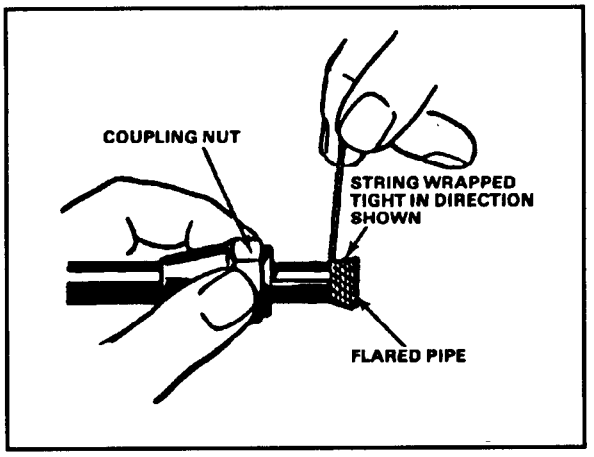

FIGURE 22-17. Leaking Fuel Line Repair.

Fuel Pump Vapor Lock High temperatures vaporizing gasoline in the fuel line causes this failure. The fuel pump will not pump vapor. Soak a cloth in water and place it over the fuel pump (Figure 22-18) to cool the fuel pump and condensate the vapor. The evaporation of moisture from the cloth has a refrigerating action that is most effective in hot, dry climates.

Other. Two other common occurrences that can damage your engine are a punctured radiator and a broken fan belt.

If you have a punctured radiator, cut the cooling fins. Push them back from the tubes in front of the leaky tubes so you have enough room to work. Cut the leaking tube in half and fold the ends back three-quarters of an inch. Close the ends by pressing them flat with pliers. This repair may hold permanently,

but radiator efficiency is reduced when several tubes are cut, and the engine may overheat.

If you have a broken fan belt and no available replacement, use a fiber rope from the vehicle tarpaulin or a piece of field telephone wire. Loop the rope around the pulley three or four times and tie with a square knot. Find and replace faulty fan belts during your daily maintenance service and inspection.

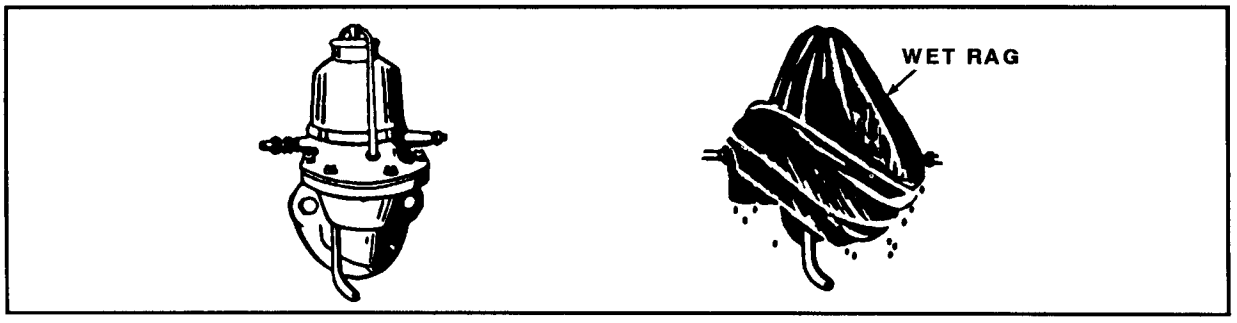

FIGURE 22-18. Fuel Pump Vapor Lock Correction.